Rinsing spray set - Brushed Platinum

27 731 970

- with round rosette
- spray flow
- automatic spout/shower diverter
- height of mixer 191 mm
- hole diameter rinsing spray 32mm
- fabric braided hose 1500 mm
- sprayface with anti-scaling system
- lead-free

Can only be combined with 32815682, 33826861, 32815861, 33836888, 32816888, 20816892, 33836875, 32815875.

Intrinsic protection against back flow.

Residual water may emerge from the spray after closing.

Operating unit can be positioned freely.

Brushed Platinum	27 731 970-06
Chrome	27 731 970-00
Platinum	27 731 970-08
Durabrass (23kt Gold)	27 731 970-09
Dark Chrome	27 731 970-19
Brushed Durabrass (23kt Gold)	27 731 970-28
Matte Black	27 731 970-33
Brushed Champagne (22kt Gold)	27 731 970-46
Champagne (22kt Gold)	27 731 970-47
Brushed Chrome	27 731 970-93
Brushed Dark Platinum	27 731 970-99

Rinsing spray set - Brushed Platinum

27 731 970

mm [inches]

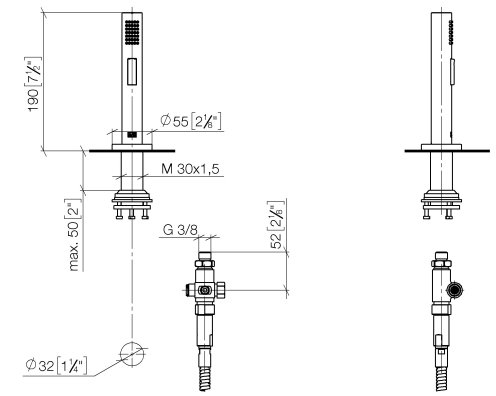

Flow rate chart

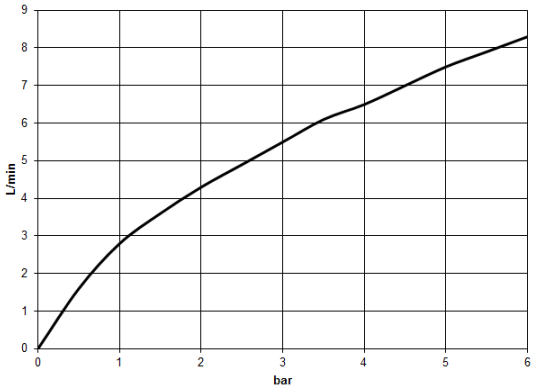

Codes & Standards

DIN 4109	EN 1717	ISO 3822	NSF372
NSF61	Ü-Zeichen		

Rinsing spray set - Brushed Platinum

27 731 970

Certificates

LGA_29	IAPMO_6397	Belgaqua_24-005-2	LGA_38	IAPMO_N-4976

Rinsing spray set - Brushed Platinum

27 731 970

Product version from 2/1/2023

Parts for other
finishes can be found
here: Chrome

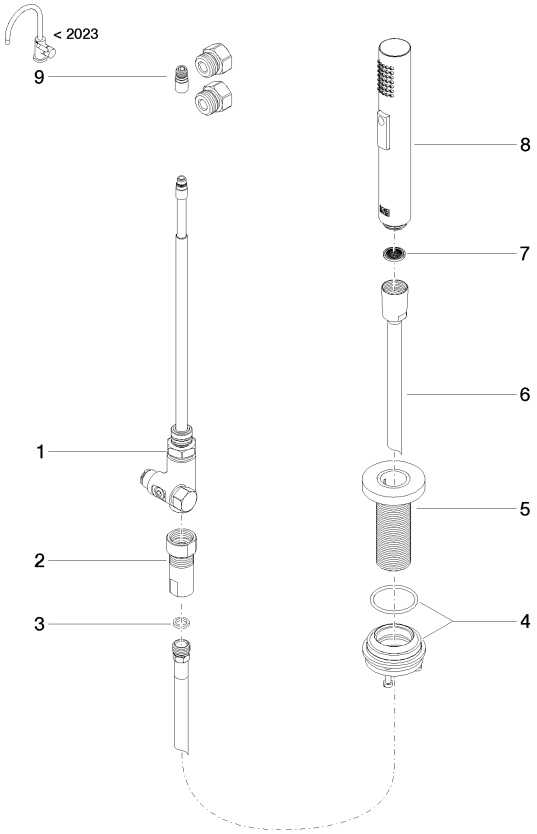

27 731 970

Spare parts list

Product version from 2/1/2023

No.	Item Number	Name	Quantity used	Delivery time
	90 17 09 046 12 90	diverter	9	2

We reserve the right to change designs, product range and technical specifications without prior notice.
More information can be found at: www.dornbracht.com +49 (0) 2371 8899 900 mail@dornbracht.com