MK17
ROUND PULL OUT KITCHEN MIXER

HANDLE VARIANTS

Paddle:M

FEATURES

- Refer to the Meir website for
- European components and cartridge
- Solid brass construction
- Pull out hand spout
- Box Weight 2.9 Kg

CARE

- Do not install tapware using any form of acetone silicones.
- Do not apply physical items (such as tools) directly to product.
- Never use house-hold or commercial detergents, citrus based cleaners, or abrasive cleaners.
- Clean using a mild washing soap solution rinsed, and dry with a soft cloth.
- Check for any product defects before installation.
- Refer to the installation manual for correct installation.

SPECIFICATIONS

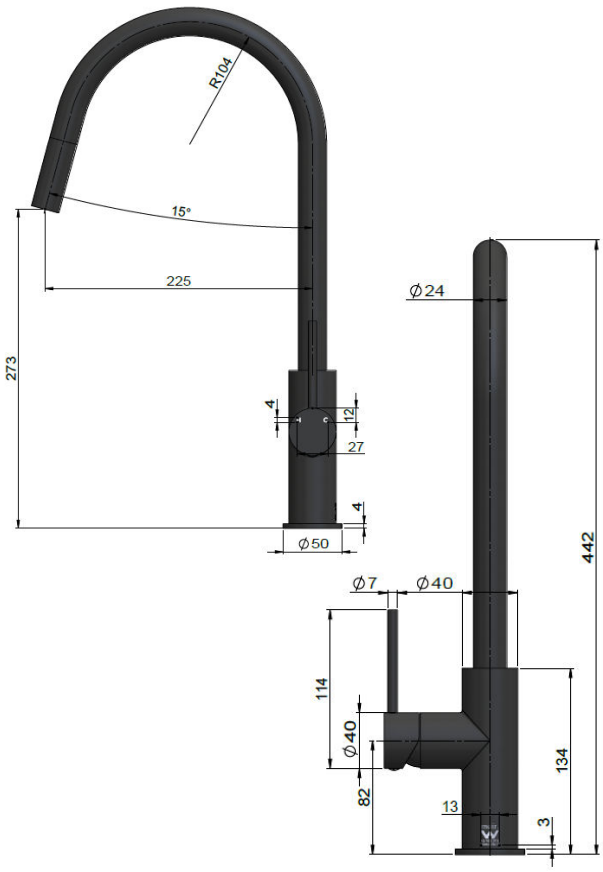

TOLERANCES

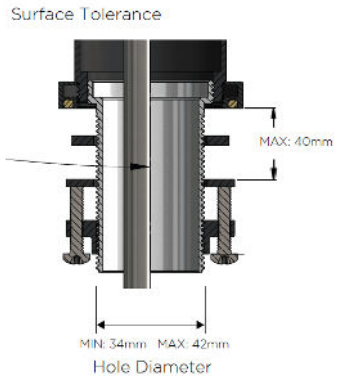

FLOW RATE GRAPH

Test pressure	0.15MPa	0.25MPa	0.3MPa	0.35MPa	0.5MPa
Mixed water - kitchen mixer	4.02	5.19	5.6	5.85	5.49

Flowchart

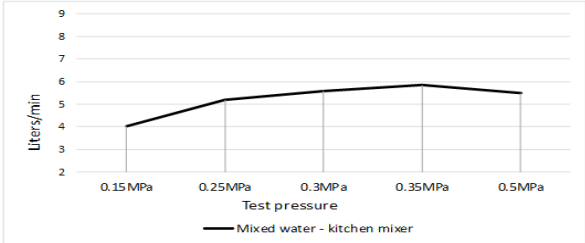

CREDENTIALS

- Watermark AS/NZS3718WMKA25013

EXPLODED VIEW

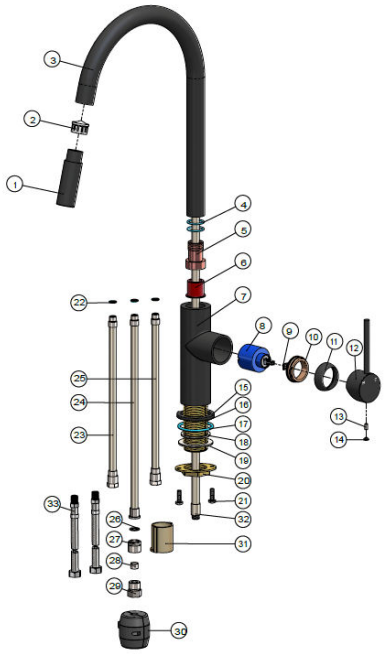

No.	Part Name	QTY
1	Spray Head	1
2	Cover	1
3	Spout	1
4	O-ring	2
5	Connector	1
6	Rubber Sleeve	1
7	Body	1
8	Kerox Catridge	1
9	Washer	1
10	Locking Nut	1
11	Decor Cover	1
12	Handle	1
13	Screw	1
14	Decor Button	1
15	Dressing Ring	1
16	Thread	1
17	O-ring	1
18	Washer	1
19	Washer	1
20	Nut	1
21	Screw	2
22	O-ring	3
23	Welding Inlet Pipe	1
24	Welding Outlet Pipe	1
25	Welding Inlet Pipe	1
26	Washer	1
27	Connector	1
28	Non-return Valve	1
29	Connector	1
30	Weight Ball	1
31	Cover	1
32	Pull Out Hose	1
33	Hose	2