MEM Wall valve clockwise closing 1/2" - Brushed Champagne (22kt Gold)

MEM

36 607 782

- rosette 60 x 60 mm
- head part with cut-to-length spindle and sleeve

Brushed Champagne (22kt Gold)	36 607 782-46
Chrome	36 607 782-00
Brushed Platinum	36 607 782-06
Platinum	36 607 782-08
Dark Chrome	36 607 782-19
Brushed Durabrass (23kt Gold)	36 607 782-28
Champagne (22kt Gold)	36 607 782-47
Brushed Chrome	36 607 782-93
Brushed Dark Platinum	36 607 782-99

Required miscellaneous

Wall valve 1/2" - 35 607 970 90
- max. recess depth 150 mm
- min. recess depth 105 mm

MEM Wall valve clockwise closing 1/2" - Brushed Champagne (22kt Gold)

MEM

36 607 782

mm [inches]

Certificates

DVGW_DW-6501DN0116.	WRAS_2011026.	LGA_29931.	WRAS_2010066.	DVGW_DW-6512DN0706.

MEM Wall valve clockwise closing 1/2" - Brushed Champagne (22kt Gold)

36 607 782

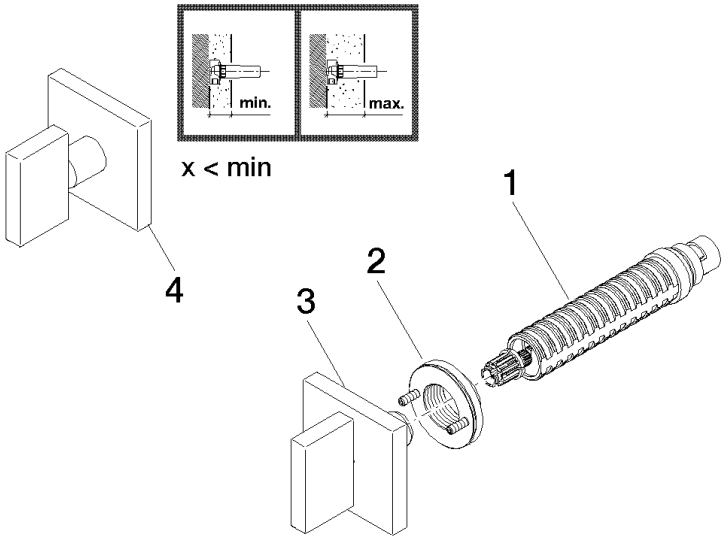

Spare parts list

No.	Item Number	Name	Quantity used	Delivery time
1	90 90 03 143 00 90	top	1	2
2	90 21 02 108 00 90	disc	1	2
3	90 20 78 002 02-46	handle	1	30
4	90 20 78 002 01-46	handle	1	-

Spare part can no longer be ordered, please order the replacement item